NOZZLE SCHEDULE

ITEM	SIZE	RATING	TYPE	MATL	REMARKS	NOTES
A	20"	UL	MW	C.S.	SINGLE PUNCHED	TIGHT BOLTED
B	8"	NPT	CPL.	C.S.	PRIMARY	EMERGENCY VENT OPENING
C	8"	NPT	CPL.	C.S.	SECONDARY	EMERGENCY VENT OPENING
D	2"	NPT	M.F.	C.S.	-	MONITORING PORT
E	3"	NPT	W.F.	C.S.	-	ATMOSPHERIC VENT OPENING
F	2"	NPT	W.F.	C.S.	-	-
G	4"	NPT	W.F.	C.S.	-	-
H	6"	NPT	H.CPL.	C.S.	-	-

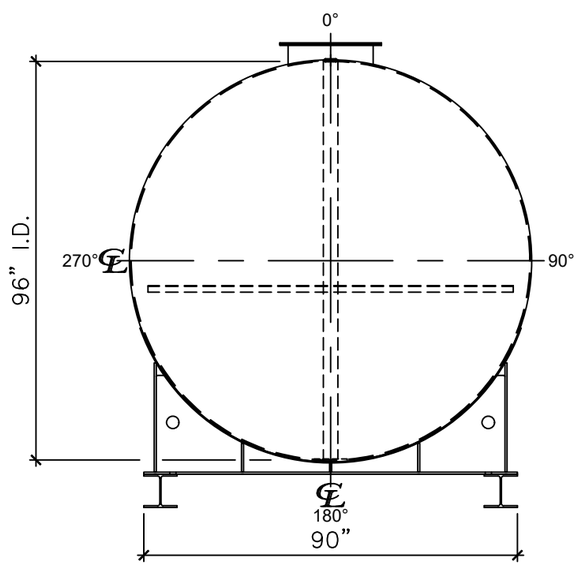

LEFT SIDE

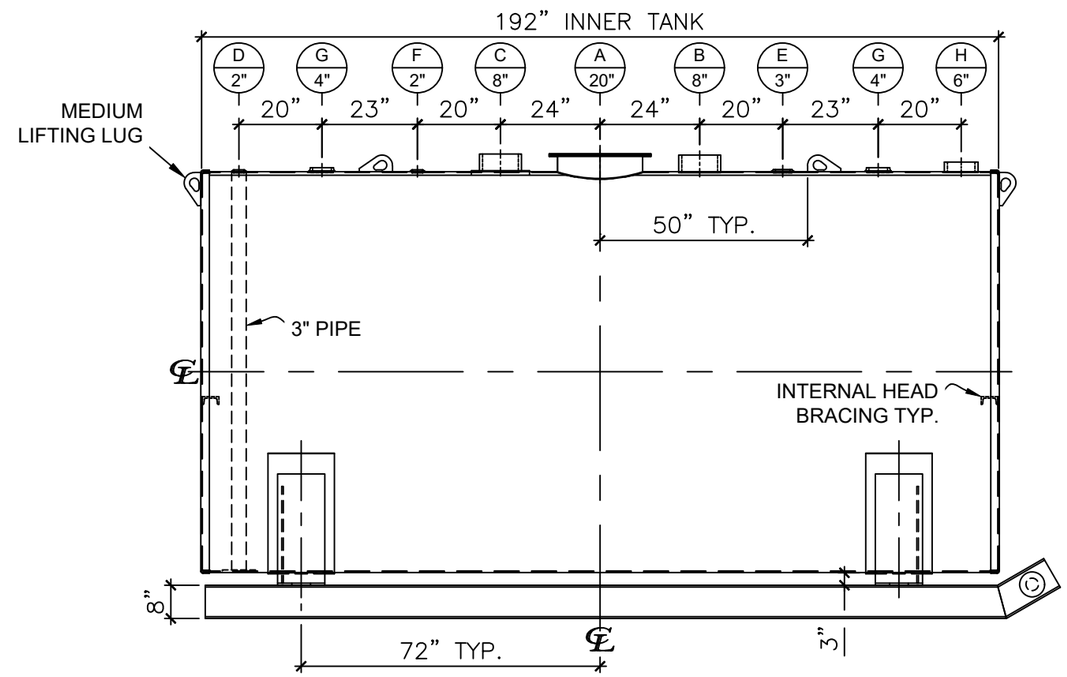

FRONT VIEW

NOTES:

A. Material: H.R. Carbon Steel.
B. Design Pressure: Atmospheric.
C. Design Temperature: Ambient.
D. Built & Labeled per UL 142.
E. Exterior: Gray primer included; see Sales Order for top coat.
F. All Fittings to be protected for shipment.
G. Customer to verify Nozzle sizes, locations, and quantities.
H. Saddles/Skids may require shimming or grouting during installation.

APPROVAL FOR CONSTRUCTION
SCHEDULE A - MASTER TERMS & CONDITION OF SALE*

☐ APPROVED AS DRAWN.

☐ APPROVED WITH NOTED CHANGES, CONSTRUCTION WILL BE SCHEDULED WHEN SIGNED DRAWING AND CONFIRMED ORDER ARE RECEIVED.

SIGNATURE:_____

DATE:_____

*All pages of this Schedule A are incorporated by reference and are a part of the additional terms of the Master Terms & Conditions of Sale. www.newberrytanks.com/masterterms.pdf

SALES ORDER:

WEIGHT (LBS): 11,100

Newberry Tanks
New Thinking

ALL UNITS INCHES UNLESS STATED OTHERWISE

PHONE: 870-735-4473

DESCRIPTION:
6,000 GALLON 96" I.D. x 16'-0" O.A.L.
DOUBLE WALL SKID TANK

CUSTOMER:			P.O.#:
-			-
DATE: 08/26/26	REV: 001	DWG.# NB06000DWS096	DRAWN BY: WR SHEET 1 OF 1

Newberry Tanks & Equipment, LLC 205 North Walker West Memphis, AR. 72301 870-735-4473 www.newberrytanks.com

This drawing may contain CONFIDENTIAL information and is intended only for the use of the specific individual(s) to which it is addressed.