NOZZLE SCHEDULE

ITEM	SIZE	RATING	TYPE	MATL	PROJ. IN	PROJ. OUT	REMARKS	NOTES
A	20"	U.L.	MANWAY	C.S.	STD.	STD.	SINGLE PUNCHED	TIGHT BOLTED
B	8"	N.P.T.	H. CPL.	C.S.	STD.	STD.	PRIMARY	EMERGENCY VENT OPENING
C	8"	N.P.T.	H. CPL.	C.S.	STD.	STD.	SECONDARY	EMERGENCY VENT OPENING
D	2"	N.P.T.	M.F.	C.S.	STD.	STD.	-	MONITORING PORT
E	4"	N.P.T.	W.F.	C.S.	STD.	STD.	-	-
F	2"	N.P.T.	W.F.	C.S.	STD.	STD.	-	-
G	6"	N.P.T.	H.CPL.	C.S.	STD.	STD.	-	-

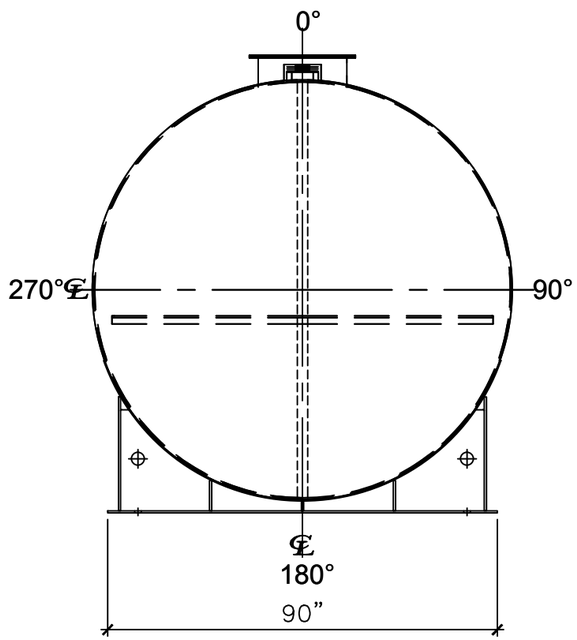

LEFT SIDE

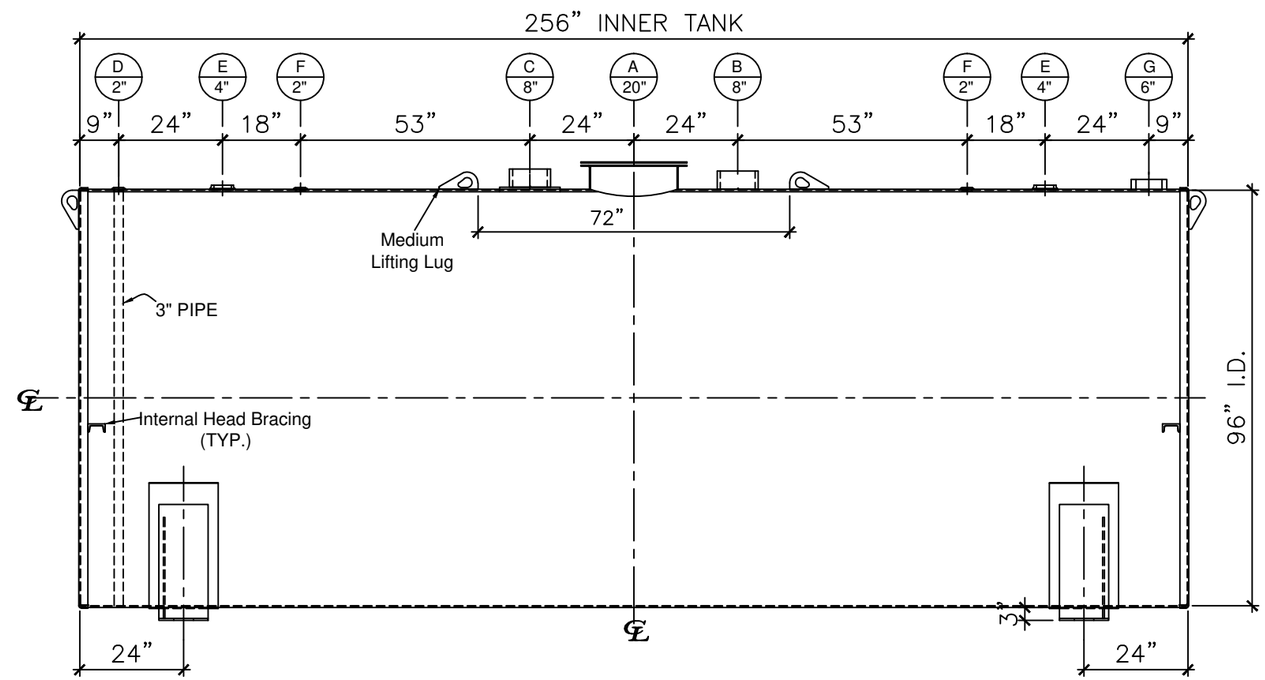

FRONT VIEW

NOTES:

A. Quantity:
B. Material: H.R. Carbon Steel.
C. Design Pressure: Atmospheric.
D. Design Temperature: Ambient.
E. Built & labeled per U.L. #142 & SwRI 97-04 specifications.
F. Exterior: Blast & apply one shop coat WHITE enamel.
G. All fittings to be protected for shipment.
H. Customer to verify nozzle sizes, locations and quantities.
I. Saddles/skids may require shimming or grouting during installation.

*All pages of this Schedule A are incorporated by reference and are a part of the additional terms of the Master Terms & Conditions of Sale.
www.newberrytanks.com/masterterms.pdf

APPROVAL FOR CONSTRUCTION
SCHEDULE A - MASTER TERMS & CONDITIONS OF SALE*

☐ APPROVED AS DRAWN.

☐ APPROVED WITH NOTED CHANGES, CONSTRUCTION WILL BE SCHEDULED WHEN SIGNED DRAWING AND CONFIRMED ORDER ARE RECEIVED.

SIGNATURE:_____
DATE:_____

SALES ORDER#

Newberry Tanks

Phone: 870-735-4473 Fax: 870-735-3982

VESSEL DESCRIPTION:
8000 Gallon 96" I.D. x 21'-4" O.A.L. Double Wall Flameshield Tank

CUSTOMER:			P.O.#
-			
DATE:	SCALE:	DWG.#	DRAWN BY: TC
-		NB08000FSD096250	CHKD. BY:

Newberry Tanks & Equipment, LLC 205 North Walker West Memphis, AR. 72301 870-735-4473 www.newberrytanks.com

This drawing may contain CONFIDENTIAL information and is intended only for the use of the specific individual(s) to which it is addressed.

X:_NTC_Autocad_STANDARD DRAWINGS_Website Drawings\Flameshield\NB08000FSD096250.dwg, 7/10/2017 12:07:56 PM