NOZZLE SCHEDULE

ITEM	SIZE	RATING	TYPE	MATL.	PROJ. IN	PROJ. OUT	REMARKS	NOTES
A	4"	NPT	W.F.	C.S.	STD.	STD.	-	-
B	2"	NPT	M.F.	C.S.	STD.	STD.	-	MONITORING PORT

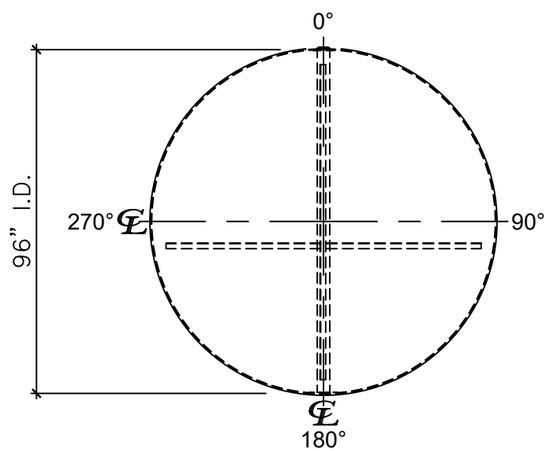

LEFT SIDE

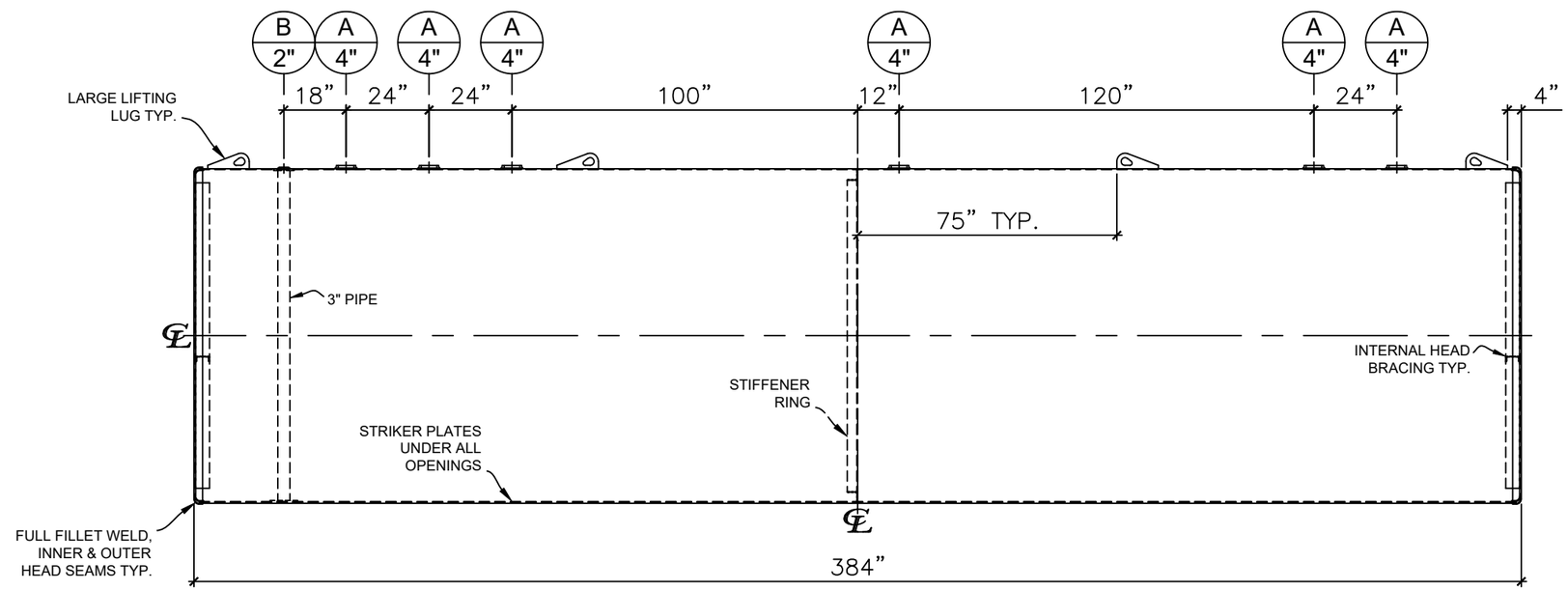

FRONT VIEW

NOTES:

A. Material: H.R. Carbon Steel.
B. Design Pressure: Atmospheric.
C. Design Temperature: Ambient.
D. Built & Labeled per UL 58 & 1746 Part 3.
E. Exterior: MIN. 100 mils FBG jacketed dual-wall Permatank®
F. Seal welded striker plates under ALL openings.
G. All Fittings to be protected for shipment.
H. Customer to verify Nozzle sizes, locations, and quantities.

APPROVAL FOR CONSTRUCTION
SCHEDULE A - MASTER TERMS & CONDITION OF SALE*

☐ APPROVED AS DRAWN.

☐ APPROVED WITH NOTED CHANGES, CONSTRUCTION WILL BE SCHEDULED WHEN SIGNED DRAWING AND CONFIRMED ORDER ARE RECEIVED.

SIGNATURE:_____

DATE:_____

*All pages of this Schedule A are incorporated by reference and are a part of the additional terms of the Master Terms & Conditions of Sale. www.newberrytanks.com/masterterms.pdf

SALES ORDER:

WEIGHT (LBS): 10,850

Newberry Tanks
New Thinking

ALL UNITS INCHES UNLESS STATED OTHERWISE

PHONE: 870-735-4473 FAX: 870-735-3982

DESCRIPTION:
12,000 GALLON 96" I.D. x 32'-0" O.A.L.
DOUBLE WALL PERMATANK

CUSTOMER:			P.O.#
-			-
DATE: 08/26/26	REV: 001	DWG.# NB12000PRM096	DRAWN BY: WR SHEET 1 OF 1

Newberry Tanks & Equipment, LLC 205 North Walker West Memphis, AR. 72301 870-735-4473 www.newberrytanks.com

This drawing may contain CONFIDENTIAL information and is intended only for the use of the specific individual(s) to which it is addressed.